MULTI-LOADER

CRAWLER CARRIER

ATTACHMENTS

ALMACRAWLER

UP EQUIP

MULTI-LOADER FX & RT
ATTACHMENTS

The Multi-Loaders comes with a wide range of fully installable, completely independent attachments to amplify its range of applications and allow operators to achieve more.

Les Multi-Loaders sont équipés d'une large gamme d'accessoires autonomes et faciles à installer qui vous permettent d'élargir la gamme d'applications du transporteur à chenilles.

	KLM 1.0		KLM 2.0		
	METRIC	IMPERIAL	METRIC	IMPERIAL	
Max capacity	1000 Kg	2200 lbs	400 Kg	880 lbs	Capacité Max.
Weight (empty)	415 Kg	915 lbs	490 Kg	1080 lbs	Poids a vide
Battery	12 V 100 Ah with charger on board (110V-230V)		12 V 100 Ah with charger on board (110V-230V)		Batterie

Self-standing kit

Kit autoportant

KML 1.0

Single stage

KML 2.0

Double stage

Lifter KIT

ML 3.0 FX / ML 3.0 RT

Fully removable hydraulic scissor lift table available in two options

Elevateur a ciseau 1 ou 2 stage

Dumper

ML 3.0 FX / ML 3.0 RT

Installable dumper kit
Rotating base
Radio remote controlled

Kit de dumper installable
Plateforme tournante
Contrôle radio

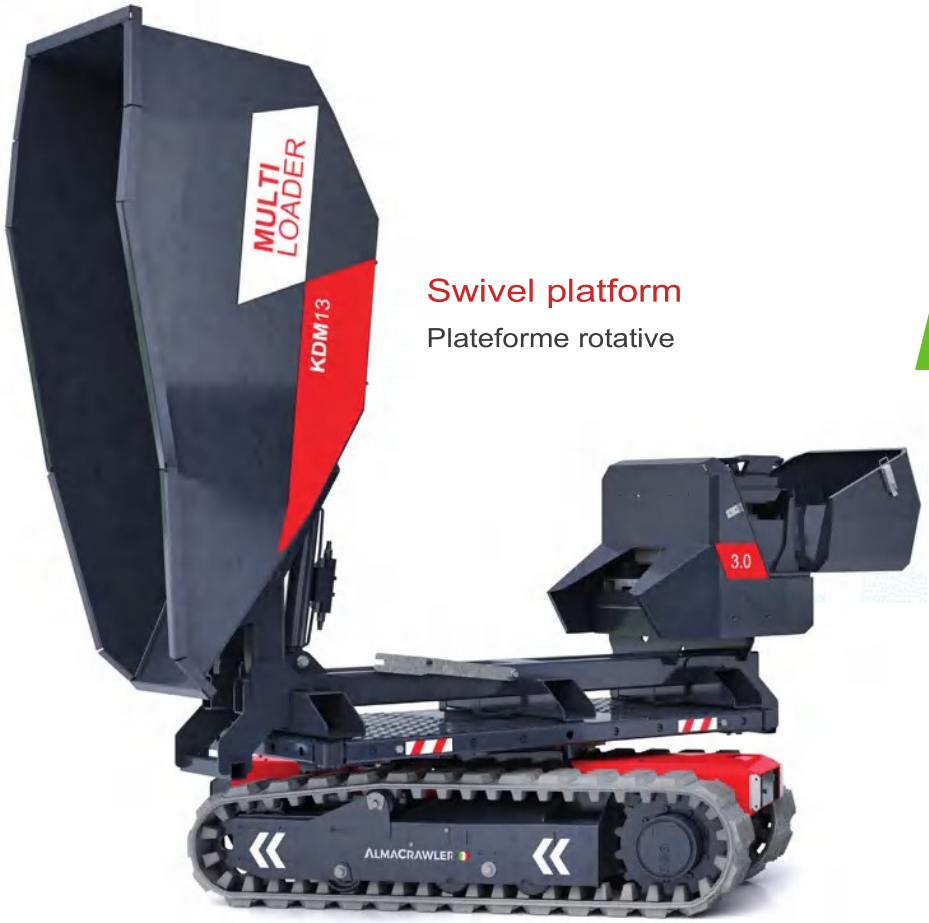

Swivel platform

Plateforme rotative

	KDM 13		
	METRIC	IMPERIAL	
Max capacity	1300 Kg	2870 lbs	Capacité Max.
Weight (empty)	380 Kg	840 lbs	Poids a vide
Struck volume	0.6 m3	21 ft3	Volume
Rated volume (ISO 6483)	0.65 m3	23 ft3	Volume max (ISO 6483)
Battery	12 V 100 Ah with charger on board (110V-230V)		Batterie

Battery Trolley

ML 3.0 FX

Custom design trolley to allow easy removal and storage of battery pack.

Chariot conçu sur mesure pour emporter et transporter facilement la batterie.

Max capacity 170 Kg / 375 lbs

Weight /poids 30 Kg / 66 lbs

Multiframe

ML 3.0 FX / ML 3.0 RT / 1.5 FX

Double-sided a-frame rack for the safe transport and storage of windows, flat glass or insulating glass units.

Cadre en A pour le transport en toute sécurité des fenêtres, du verre ou des panneaux.

Max capacity 2400 Kg / 5290 lbs
ML 3.0 FX / RT (1200 Kg / 2645 lbs for each side)

Max capacity 1300 Kg / 2870 lbs
ML 1.5 FX (650 Kg / 1435 lbs for each side)

Weight (Poids) 145 Kg / 320 lbs

Dolly

ML 3.0 FX / ML 3.0 RT / ML 1.5 FX

Support extension - helps carry extra-long loads easily

Transportez facilement des charges plus longues

Swivel plate for ML 1.5 FX

Plateforme tournante pour ML 1.5 FX

Max capacity
1400 Kg / 3090 lbs
Weight (Poids)
100 Kg / 220 lbs

Max capacity
1500 Kg / 3310 lbs
Weight (Poids)
125 Kg / 275 lbs

Forest Kit

ML 3.0 FX / ML 3.0 RT / 1.5 FX

Forest kit for safe transport of logs

Kit forestier pour le transport en toute sécurité

Max capacity
ML 3.0 FX / RT 2950 Kg / 6500 lbs
ML 1.5 FX 1450 Kg / 3200 lbs
Weight (Poids) 50 Kg / 110 lbs

MULTI-LOADER FX & RT **ATTACHMENTS**

Multiframe

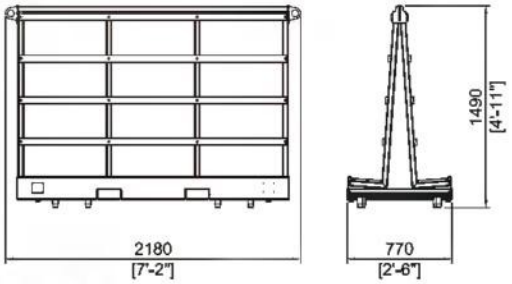

ML 1.5 FX

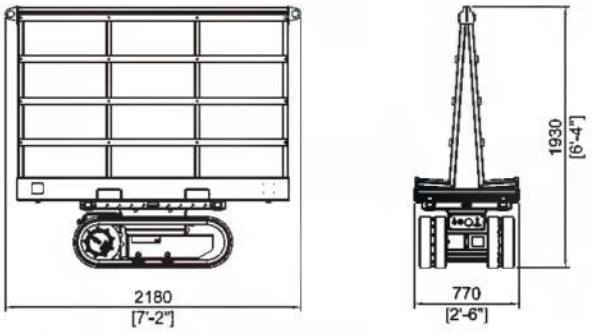

ML 3.0 FX / ML 3.0 RT

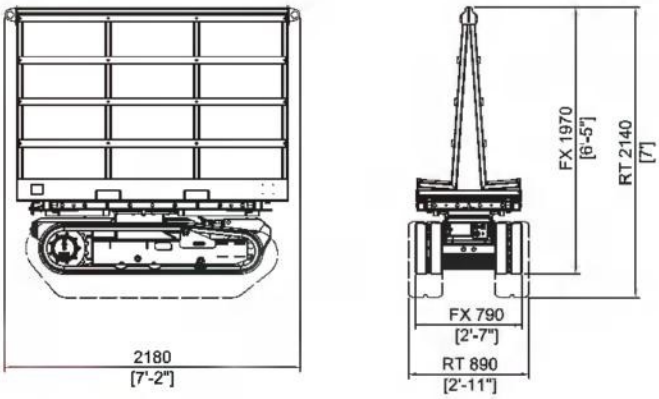

Battery Trolley

ML 3.0 FX

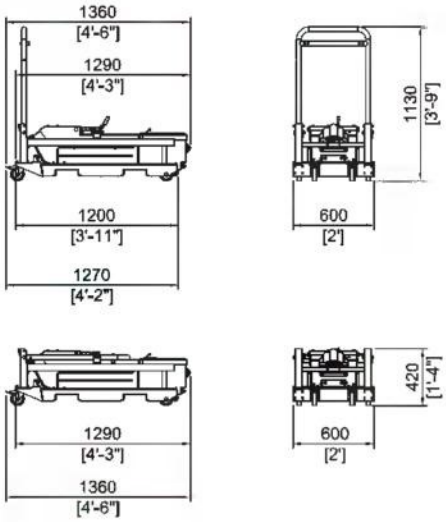

Dolly

ML 3.0 FX

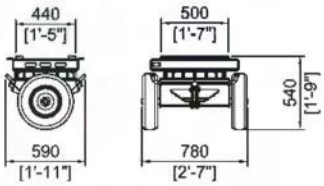

ML 3.0 RT / 1.5 FX

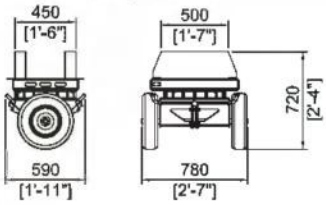

Forest kit

ML 1.5 FX

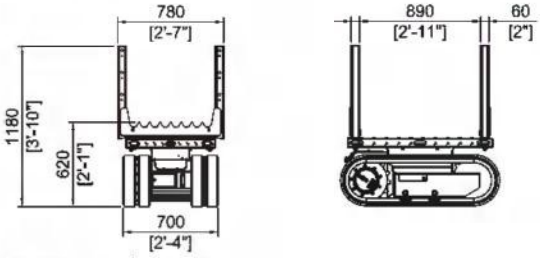

ML 3.0 FX / 3.0 RT

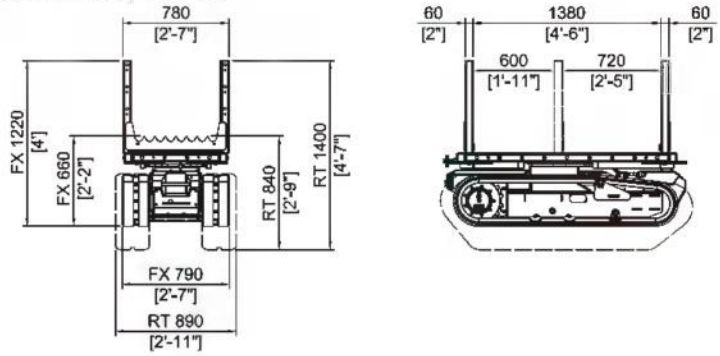

Lifter Kit

ML 3.0 FX / 3.0 RT

KLM 1.0

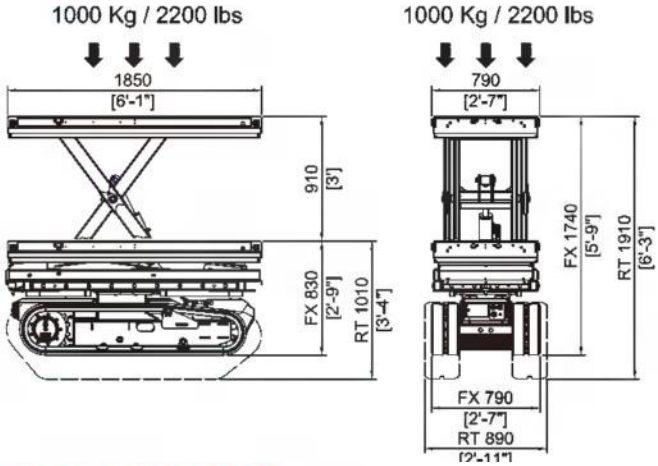

KLM 2.0

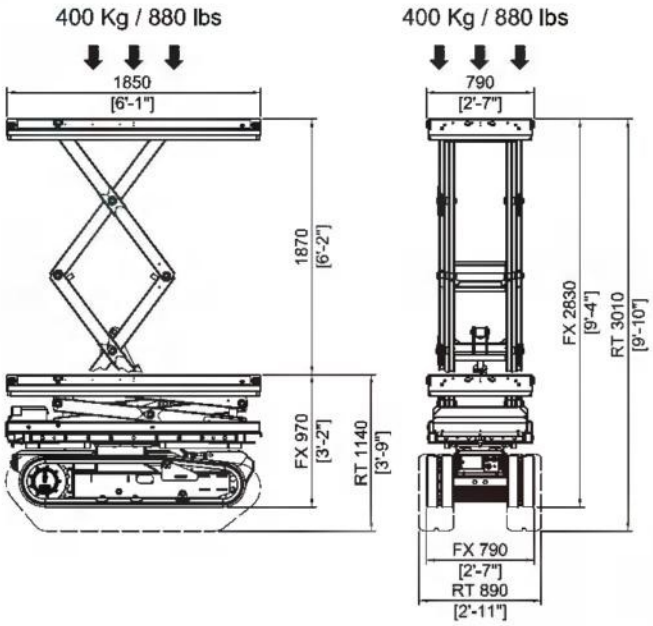

Dumper KDM13

ML 3.0 FX / 3.0 RT

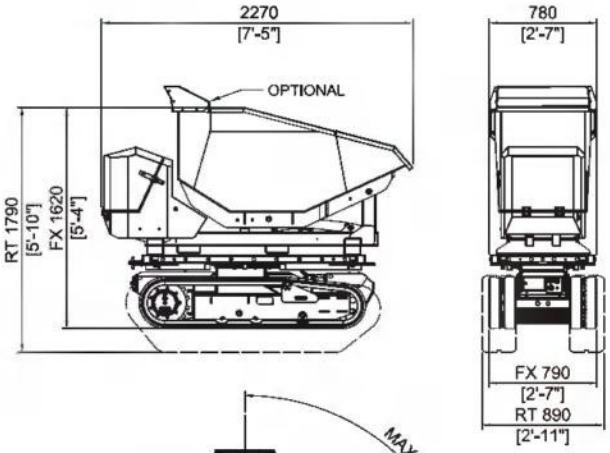

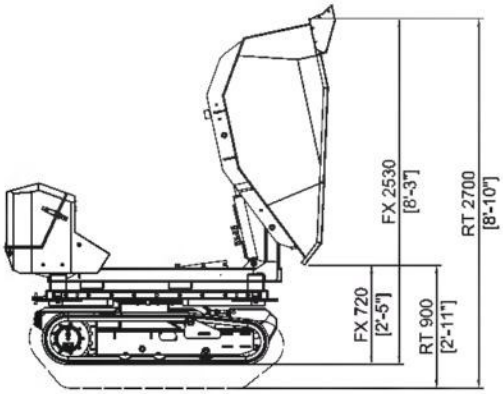

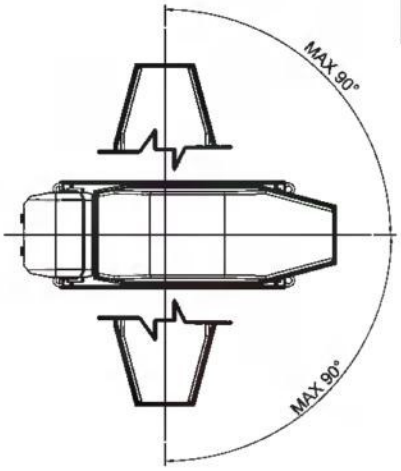

Swivel plate

ML 1.5 FX

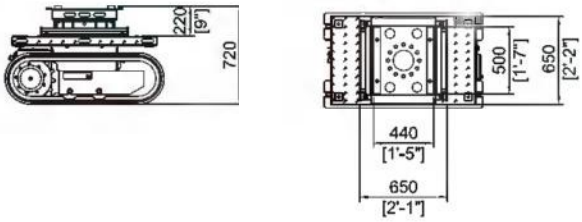

ALMACRAWLER

UP EQUIP

Upequip

1-844-Upequip / 514-360-7191

www.UPequip.ca